LONG SEAMS

COURSE	ORIENTATION	ORIENTATION	ORIENTATION	ORIENTATION	ORIENTATION
1(TOP)	47°	119°	191°	263°	335°
2	45°	117°	189°	261°	333°
3	47°	119°	191°	263°	335°

*VERT – TOP TO BOTTOM

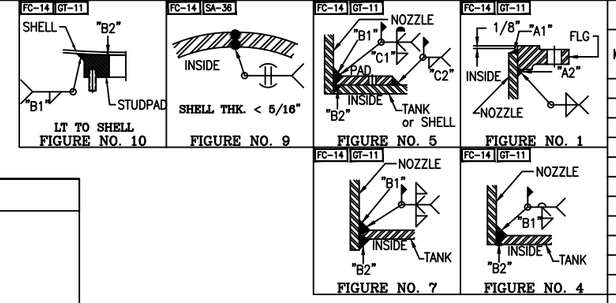

Ship loose items:	
(5 PCs) SHELL COURSE #1 & #2.	(1 PC) NOZZLE D W/ 12" LONG PIPE
(5 PCs) SHELL COURSE #3.	(1 PC) NOZZLE LT (STUDPAD)
(6 PCs) ROOF PLATES.	(1 PC) NOZZLE F1 W/ 30" LONG PIPE
(6 PCs) BOTTOM PLATES.	(1 PC) NOZZLE F2 W/ 24" LONG PIPE
(5 PCs) ROLLED RIM ANGLE PIECES.	(1 PC) NOZZLE V W/ 26" LONG PIPE.
(2 PCs) NOZZLE V REPAD.	(1 PC) NOZZLE OF W/ 12" LONG PIPE.
(2 PCs) NOZZLE D REPAD.	(1 PC) NAMEPLATE
(1 EACH) NOZZLE FLANGE A1, A2, A3, A4, A5.	STIFFENERS:
(1 EACH) PIPE W/ ELBOW FOR A1, A2, A3, A4, A5.	• Channels (C6 X 13#):
(1 PC) MANWAY M1 ASSEMBLY.	(1 EACH) CR1,CR2,CR3,CR4,CR5,CR6,CR7;
(11 PCs) ANCHOR LUG.	CL1,CL2,CL3,CL4,CL5,CL6,CL7.
(1 PC) ANCHOR LUG W/ GROUND LUG.	(7 PCS) CM
(4 PCS) LIFT LUG & LIFT LUG REPAD.	• Beams:
(1 EACH) PIPING SUPPORT ASSY. FOR A1,A2,A3,A4,A5	(2 PCs) W6 X 25#
(1 EACH) BASE PLATE FOR A1,A2,A3,A4,A5	

NOTE 7 (BY OTHERS):
TANK CAN BE TESTED WITH ONE OF THE FOLLOWING WAYS:
1. VACUUM BOX (FLOOR SEAMS) + 2 PSIG VESSEL PNEUMATIC TEST WITH SOAP TEST. OR
2. FULL OF WATER (24 HR HOLD).

NOZZLE SCHEDULE

MARK	SERVICE	SIZE	RATING	TYPE / STYLE	NECK SCHED.	PROJECTION EXT. (E)	PROJECTION INT. (MIN.)	WELD FIGURE	REPAD SIZE (WIDTH X THK.)	WELD SIZE "A1"	"A2"	"B1"	"B2"	"C1"	"C2"
A1	PUMP SUCTION	30"	150#	RFSO W/ELBOW	1/4" / 10S	SEE DWG	SEE DWG	1,7	–	1/4	1/4	1/4	1/4	–	–
A2	PUMP SUCTION	16"	150#	RFSO W/ELBOW	1/4" / 10S	SEE DWG	SEE DWG	1,7	–	1/4	1/4	1/4	1/4	–	–
A3	PUMP SUCTION	20"	150#	RFSO W/ELBOW	1/4" / 10S	SEE DWG	SEE DWG	1,7	–	1/4	1/4	1/4	1/4	–	–
A4	PUMP SUCTION	24"	150#	RFSO W/ELBOW	1/4" / 10S	SEE DWG	SEE DWG	1,7	–	1/4	1/4	1/4	1/4	–	–
A5	PUMP SUCTION	24"	150#	RFSO W/ELBOW	1/4" / 10S	SEE DWG	SEE DWG	1,7	–	1/4	1/4	1/4	1/4	–	–
D	DRAIN	8"	150#	RFSO	40S	8"	–	1,5	2" x 3/16" SEE DWG	1/4	1/4	1/2	3/16	3/16	3/16
F1	FEED (INLET)	18"	150#	RFSO	1/4" / 10S	SEE DWG	–	1,4	–	1/4	1/4	1/4	1/8	–	–
F2	FEED (INLET)	14"	150#	RFSO	1/4" / 10S	SEE DWG	–	1,4	–	1/4	1/4	1/4	1/8	–	–
M	MANWAY	42"	150#	RFSO	1/4" / 10S	12"	1"	1,7	–	1/4	1/4	1/4	1/4	–	–
V	VENT	18"	–	PIPE W/ ELBOWS	3/8"	SEE DWG	–	5	3" X 3/16"	–	–	1/4	1/8	3/16	3/16
LT	LEVEL TRANSMITTER	3"	150#	STUDPAD	–	–	–	10	–	–	–	1/4	1/8	–	–
OF	OVERFLOW	18"	150#	RFSO	1/4"	8"	1"	1,7	–	1/4	1/4	1/4	1/8	–	–

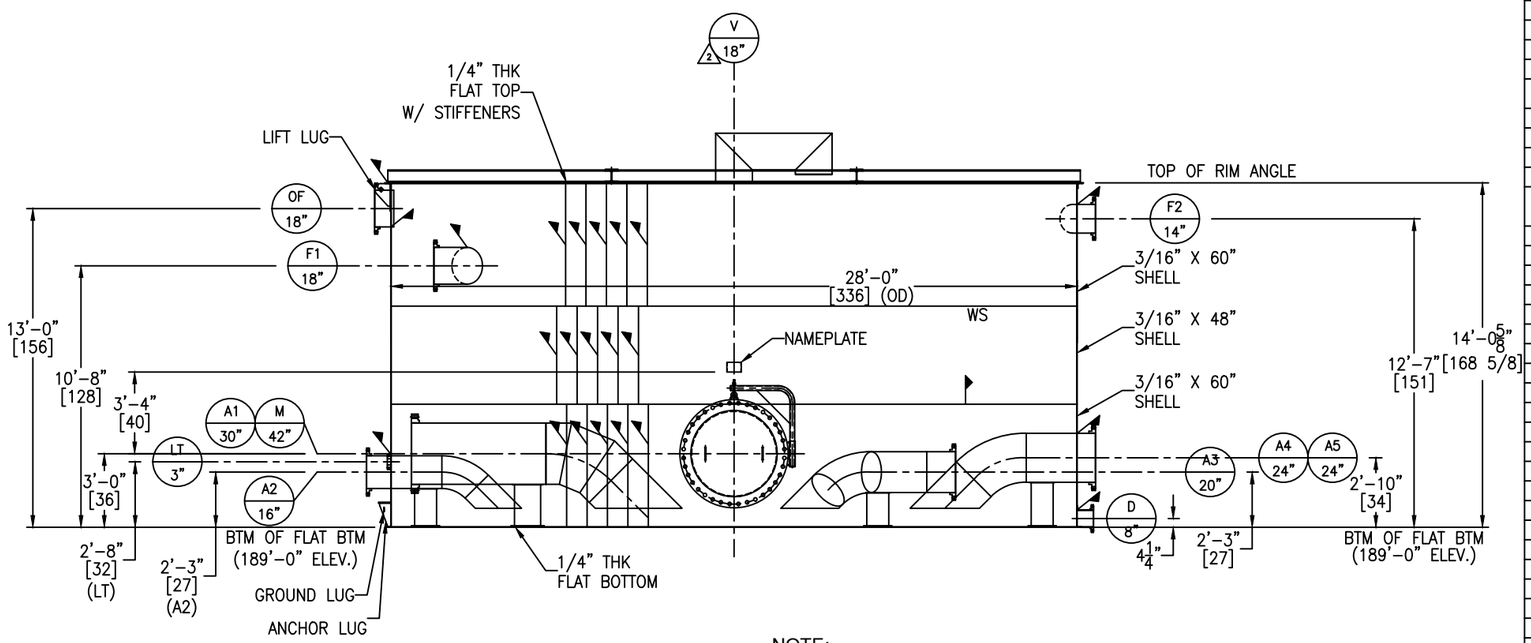

NOTE: SHELL 1 & 2 CIRC. SEAMS TO BE WELDED IN SHOP BEFORE SHIPPING.
ALL OTHER CIRC. SEAMS TO BE FIELD WELDED.
ALL LONG SEAMS TO BE FIELD WELDED.
ALL NOZZLES, STUDPAD AND NOZZLE REPADS TO BE FIELD WELDED.
PUMP SUCTION NOZZLES FLANGES WILL BE FIELD WELDED.
ROOF STIFFENERS ARE FIELD WELDED.
RIM ANGLE WILL BE FIELD WELDED.
FLAT BOTTOM AND ROOF ARE FIELD WELDED.
ANCHOR CHAIRS ARE FIELD WELDED.
LIFT LUGS AND ITS REPADS ARE FIELD WELDED.
ALL NOZZLE SUPPORTS ARE FIELD WELDED.

NOTE:
- FLANGES FOR A1, A2, A3, A4 & A5 ARE SHIPPED LOOSE FOR EASY FIELD FABRICATION.
- THE TANK HAS BEEN DESIGNED TO APPLICABLE SECTIONS OF API-650.HOWEVER, NO NOZZLE LOADINGS WERE CONSIDERED SINCE THE PIPE SUCTIONS WILL BE SUPPORTED ON EACH SIDE OF TANK WALL.

MATERIALS OF CONSTRUCTION

	VESSEL
SHELL	SA240-304/304L
FLAT TOP/BOTTOM	SA240-304/304L
RIM ANGLE	SA479-304/304L
NOZZLE NECKS	SA312-304/304L WLD, SA240-304/304L & SA403-304/304L WPB
NOZZLE FLANGES	SA182F-304/304L
MANWAY NECKS	SA240-304/304L
MANWAY FLANGES	SA182F-304/304L
GASKETS	GARLOCK 3000
BOLTS/STUDS	SA193-B7 (ZINC PLATED)
NUTS	SA194-2H (ZINC PLATED)
REPADS	SA240-304/304L
COUPLINGS	–
SUPPORTS/HOLD DOWNS	SA240-304/304L
ROOF STIFFENERS	SA36
VACUUM RINGS	–
LIFTING LUG	SA240-304/304L
GROUND LUG	SA240-304/304L
BAFFLE	–
LADDER	–
TANK CLIPS (LADDER)	–
HANDRAIL	–
HANDRAIL CLIPS	–
PLATFORM	–
PLATFORM CLIPS	–
DIPTUBE SUPPORT	–
JACKET SHELL	–
JACKET HEADS	–
JACKET NOZZLE NECKS	–

DESIGN DATA

	VESSEL
DESIGN AND FAB. CODE	API650
CERT. STAMP REQ'D.	NO
DESIGN PRESSURE	ATM
DESIGN TEMPERATURE	130° F
MIN. DESIGN METAL TEMP.	-20° F @ ATM
OPERATING PRESSURE	–
OPERATING TEMPERATURE	–
JOINT EFFICIENCY HEADS	0.70
JOINT EFFICIENCY SHELL	0.70
CORROSION ALLOWANCE	0"
SPECIFIC GRAVITY	1.0
EARTHQUAKE ZONE	Ss = (0.26) S1 = (0.088)
WIND LOAD	109 MPH
STRESS RELIEF	NOT REQ'D
RADIOGRAPHIC EXAM	NOT REQ'D
DYE PENETRANT EXAM	NOT REQ'D
MAGNETIC PARTICLE EXAM	NOT REQ'D
HYDROSTATIC TEST	SEE NOTE 7 (BY OTHERS)
PNEUMATIC TEST	SEE NOTE 7 (BY OTHERS)
JKT DESIGN AND FAB. CODE	–
JKT CERT. STAMP REQ'D.	–
JKT DESIGN PRESSURE	–
JKT DESIGN TEMPERATURE	–
JKT MIN. DESIGN METAL TEMP.	–
JKT OPERATING PRESSURE	–
JKT OPERATING TEMPERATURE	–
JKT JOINT EFFICIENCY HEADS	–
JKT JOINT EFFICIENCY SHELL	–
JKT HYDRO TEST	–

VESSEL FINISH

INTERIOR WELD TREATMENT:	SAV TANK STANDARD
EXTERIOR WELD TREATMENT:	SAV TANK STANDARD
SAV TANK FINISHING STANDARD:	SEE NOTE 6
INSULATION:	N/A
PAINTING:	BY OTHERS

VESSEL CAPACITY AND WEIGHTS

OPERATING CAPACITY	–
FULL CAPACITY	64,300 GAL.
EMPTY VESSEL WEIGHT	35,800 LBS.
WEIGHT FULL OF WATER	572,300 LBS.
WEIGHT FULL OF PRODUCT	572,300 LBS.

QUALITY CONTROL

ENG. _____ DATE: _____

Q.C. _____ DATE: _____

This drawing is issued for customer approval. please review, make approval changes (if any) in red. check the appropriate box, sign & date.

- ☐ Approval – no changes. Please proceed with fabrication.
- ☐ Approved as noted. Please proceed with fabrication
- ☐ Not approved. Please make changes and resubmit.

Customer signature _____ Date _____

GENERAL NOTES

1.) COVER ALL FLANGES, OPENINGS & MACHINED SURFACES PRIOR TO SHIPMENT UNLESS OTHERWISE NOTED.
2.) BOLT HOLES TO STRADDLE 0° & 180° UNLESS OTHERWISE NOTED.
3.) REPADS TO HAVE (1) ø1/4" NPT TELL-TALE HOLES FOR PNEUMATIC TESTING AT 2 PSIG FOR PRESSURE RETAINING PARTS. ALL OTHER REPADS TO HAVE (1) ø1/4" WEEP HOLE AT LOWEST POINT ON PAD.
4.) MANUFACTURING TOLERANCE TO BE IN ACCORDANCE WITH API STANDARD 650 7.5.
5.) ASME MATERIALS TO CONFORM TO THE FOLLOWING: FLANGES – B16.5, FITTINGS – B16.9 & COUPLINGS – B16.11.
6.) PICKLE ALL EXTERIOR WELDS. PASSIVATE INTERIOR & EXTERIOR OF VESSEL.
7.) TANK CAN BE TESTED WITH ONE ONE THE FOLLOWING WAYS (BY OTHERS):
1. VACUUM BOX (FLOOR SEAMS) + 2 PSIG PNEUMATIC TEST WITH SOAP TEST. OR
2. FULL OF WATER (24 HR HOLD).

REVISIONS

REV	D.BY	C.BY	DATE	DESCRIPTION
				AS BUILT
2	RS	NP	5/29/25	CERTIFIED
1	AD	RS	5/23/25	APPROVAL REV 1
0	RS	NP	5/1/25	APPROVAL

Savannah Tank & Equipment Corp.
1517 Telfair Road, Savannah, GA 31415
(912) 233-8902

DRAWN BY: RS
CHK'D BY: NP
APPROVED BY: NP
SCALE: 1/4" = 1'-0"

NOAH INDUSTRIAL
CLEAR CHEST TANK
EQUIP. #
CUST. PO #25004-0001

DRAWING NO.: 044-25-1 SHT 1 OF 9 REV. SET 2

LONG SEAMS

COURSE	ORIENTATION	ORIENTATION	ORIENTATION	ORIENTATION	ORIENTATION
1(TOP)	47°	119°	191°	263°	335°
2	45°	117°	189°	261°	333°
3	47°	119°	191°	263°	335°

*VERT – TOP TO BOTTOM

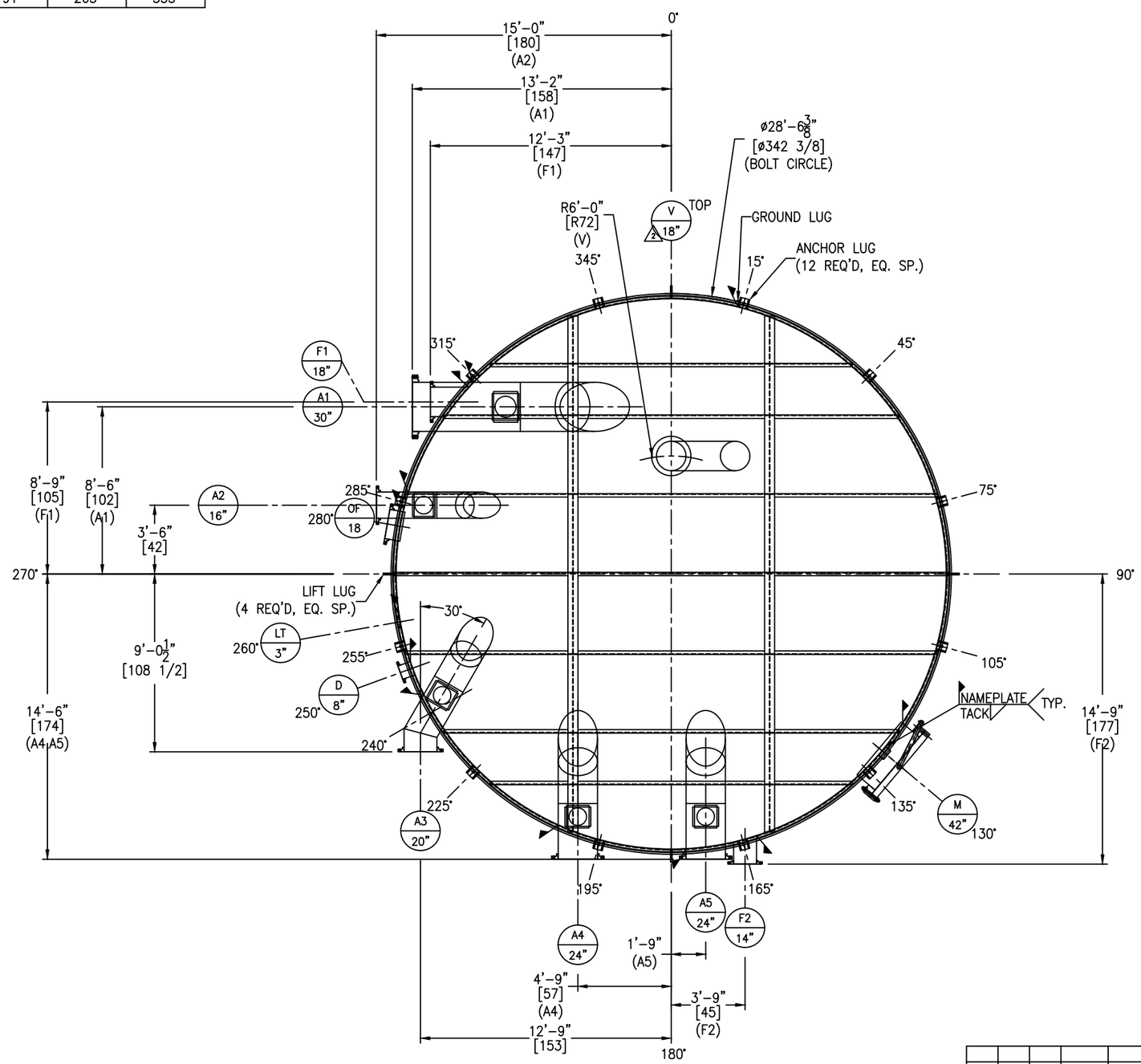

REV	D.BY	C.BY	DATE	DESCRIPTION
				AS BUILT
2	RS	NP	5/29/25	CERTIFIED
1	AD	RS	5/23/25	APPROVAL REV 1
0	RS	NP	5/1/25	APPROVAL

REVISIONS

Savannah Tank & Equipment Corp.
1517 Telfair Road, Savannah, GA 31415
(912) 233-8902

DRAWN BY: RS
CHK'D BY: NP
APPROVED BY: NP
SCALE: 1/4" = 1'-0"

NOAH INDUSTRIAL
CLEAR CHEST TANK
EQUIP. #
CUST. PO #25004-0001

DRAWING NO.: 044-25-2 SHT 2 OF 9 REV. SET 2

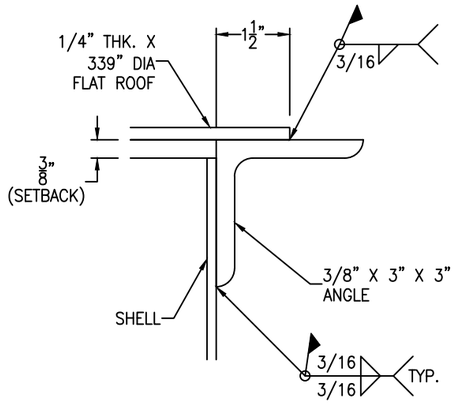

*RIM ANGLE TO BE ROLLED TO 336" ID IN (5 SEGMENTS).

RIM ANGLE DETAIL

SCALE: 6" = 1'-0"

FC-14

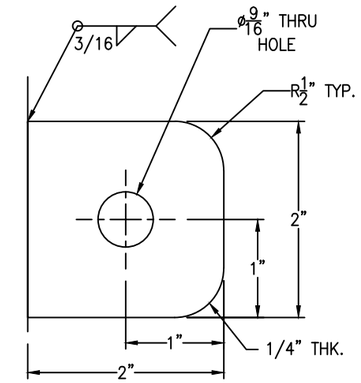

GROUND LUGS ARE LOCATED @ 15°

GROUND LUG DETAIL

SCALE: 1'-0" = 1'-0"

*NOTCH PIPE.

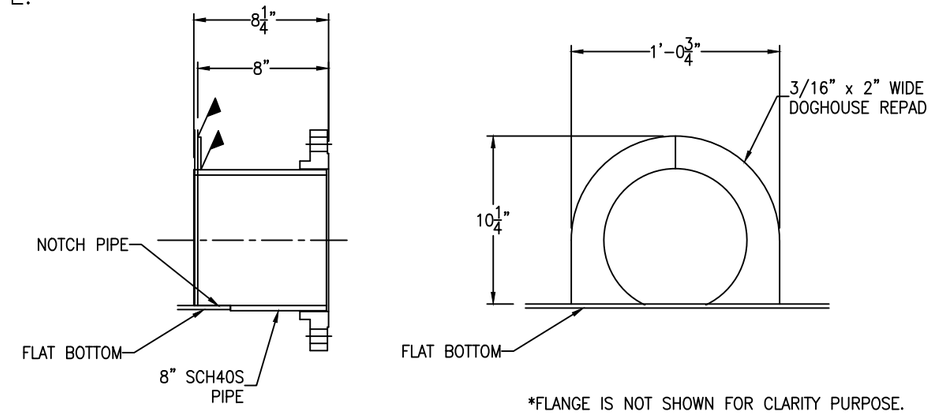

*FLANGE IS NOT SHOWN FOR CLARITY PURPOSE.

NOZZLE D DETAIL

SCALE: 2" = 1'-0"

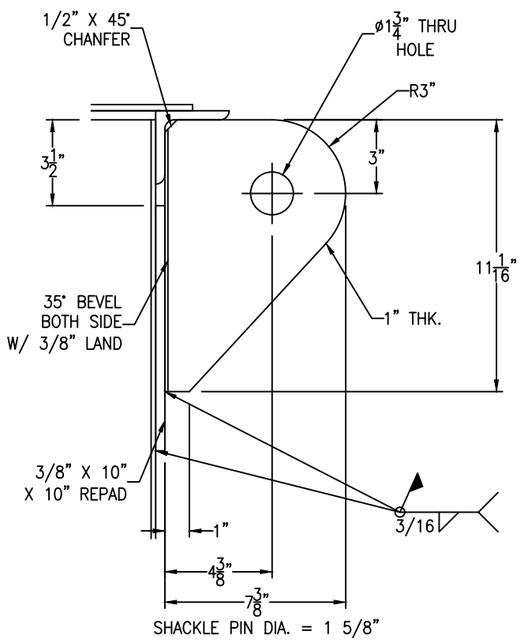

LIFT LUG DETAIL

(4 REQ'D) SCALE: 3" = 1'-0"

FC-14

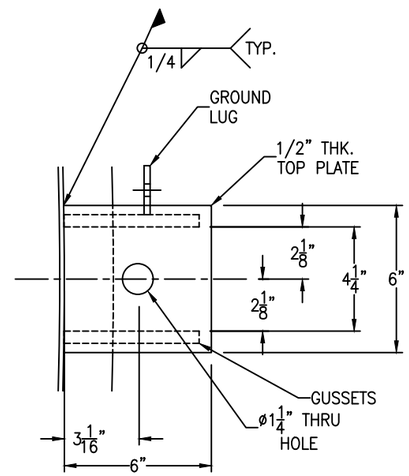

FC-14

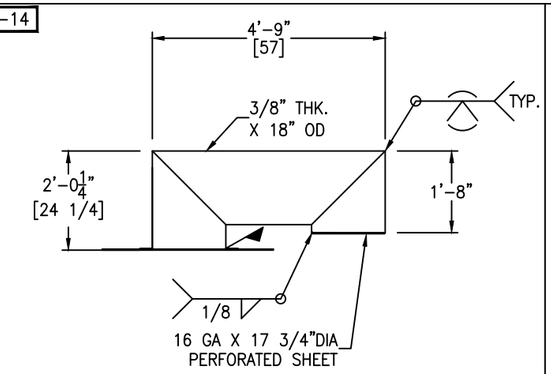

⚠2 NOZZLE V DETAIL

SCALE: 1/2" = 1'-0"

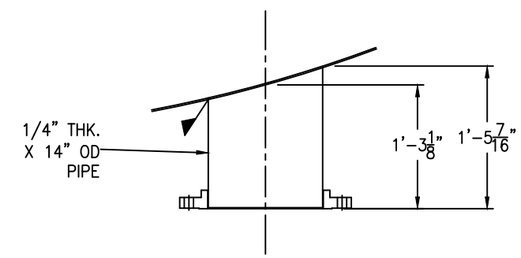

NOZZLE F2 DETAIL

SCALE: 1" = 1'-0"

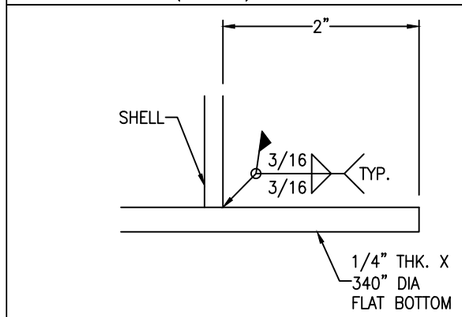

FLAT BOTTOM DETAIL

SCALE: 1'-0" = 1'-0"

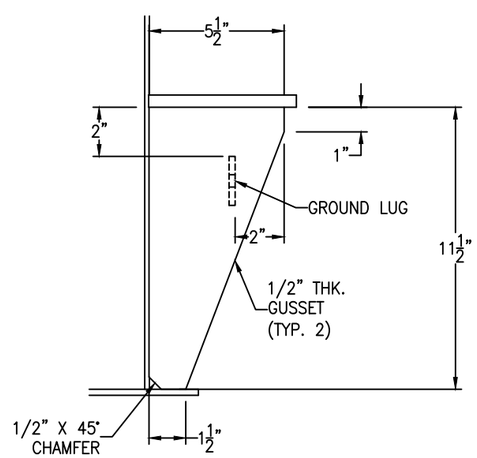

ANCHOR LUG DETAIL

(12 REQ'D) SCALE: 3" = 1'-0"

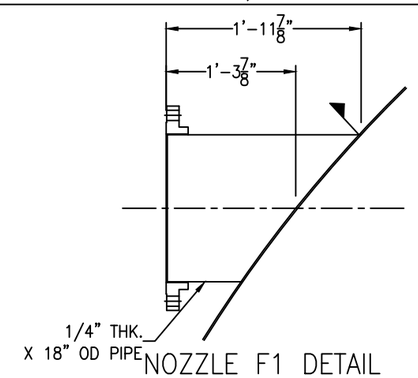

NOZZLE F1 DETAIL

SCALE: 1" = 1'-0"

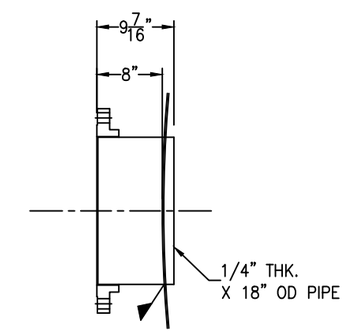

NOZZLE OF DETAIL

SCALE: 1" = 1'-0"

REV	D.BY	C.BY	DATE	DESCRIPTION
				AS BUILT
2	RS	NP	5/29/25	CERTIFIED
1	AD	RS	5/23/25	APPROVAL REV 1
0	RS	NP	5/1/25	APPROVAL

⚠1 REVISIONS

Savannah Tank & Equipment Corp.
1517 Telfair Road, Savannah, GA 31415
(912) 233-8902

DRAWN BY: RS
CHK'D BY: NP
APPROVED BY: NP
SCALE: 1/4" = 1'-0"

NOAH INDUSTRIAL
CLEAR CHEST TANK
EQUIP. #
CUST. PO #25004-0001

DRAWING NO.: 044-25-3 | SHT 3 OF 9 | REV. SET 2

FC-14

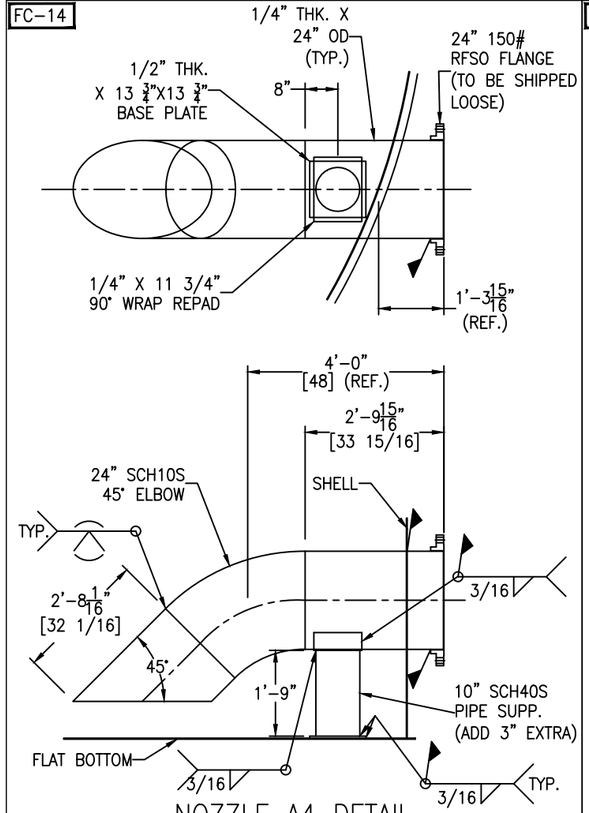

NOZZLE A4 DETAIL

SCALE: 6" = 1'-0"

FC-14

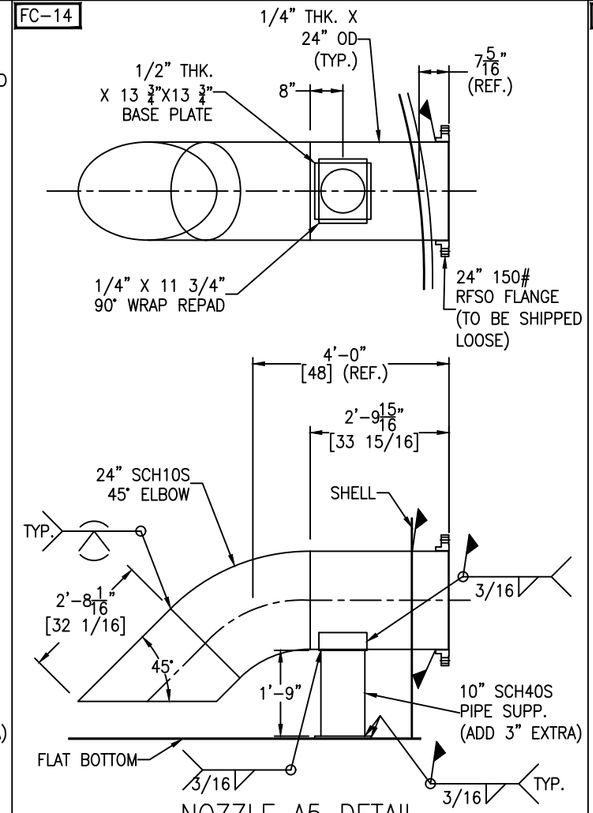

NOZZLE A5 DETAIL

SCALE: 1'-0" = 1'-0"

FC-14

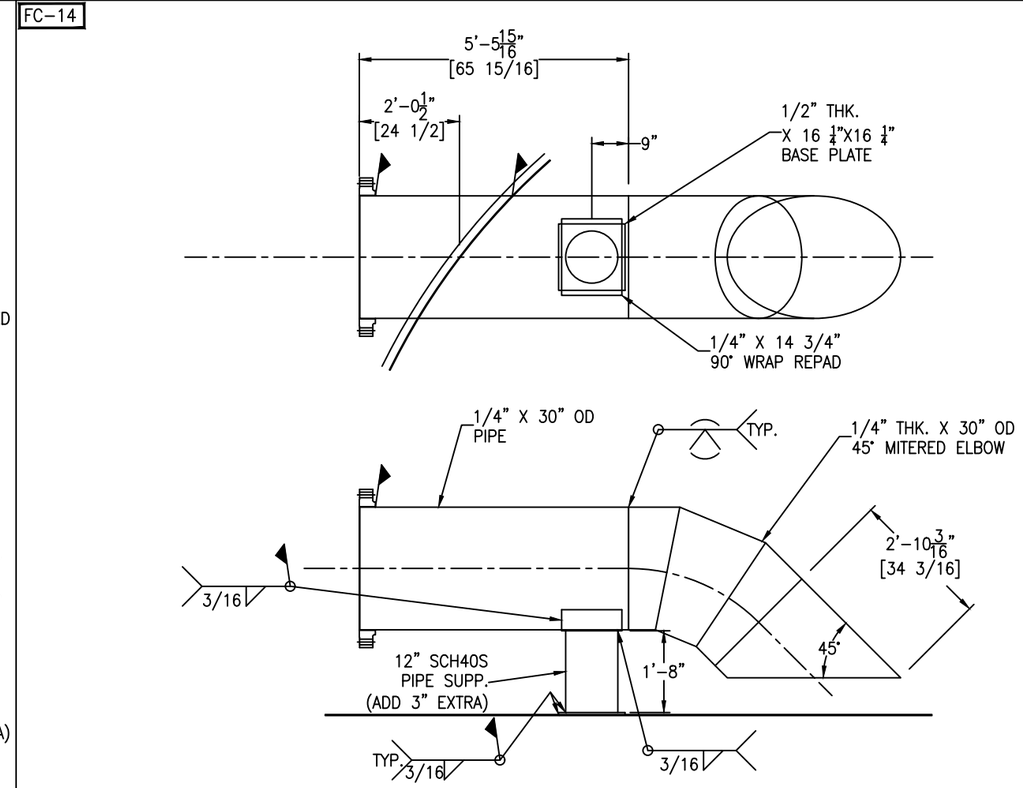

NOZZLE A1 DETAIL

SCALE: 1/2" = 1'-0"

FC-14

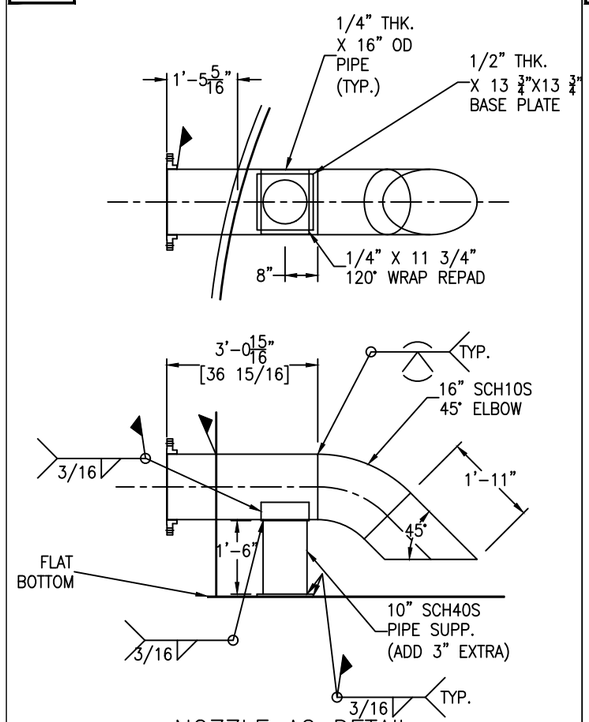

NOZZLE A2 DETAIL

SCALE: 1/2" = 1'-0"

FC-14

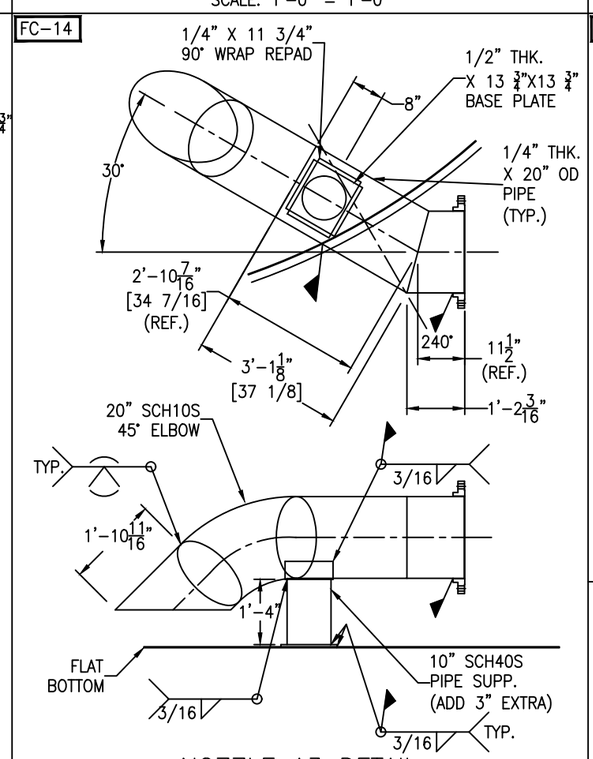

NOZZLE A3 DETAIL

(12 REQ'D) SCALE: 3" = 1'-0"

FC-14

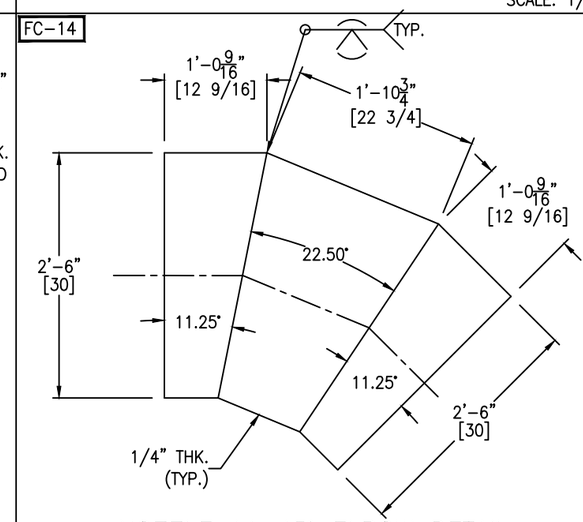

NOZZLE A1 45° ELBOW DETAIL

SCALE: 1" = 1'-0"

REV	D.BY	C.BY	DATE	DESCRIPTION
				AS BUILT
2	RS	NP	5/29/25	CERTIFIED
1	AD	RS	5/23/25	APPROVAL REV 1
0	RS	NP	5/1/25	APPROVAL

⚠ REVISIONS

Savannah Tank & Equipment Corp.
1517 Telfair Road, Savannah, GA 31415
(912) 233-8902

DRAWN BY: RS
CHK'D BY: NP
APPROVED BY: NP
SCALE: 1/4" = 1'-0"

NOAH INDUSTRIAL
CLEAR CHEST TANK
EQUIP. #
CUST. PO #25004-0001

DRAWING NO.: 044-25-4 SHT 4 OF 9 REV. SET 2

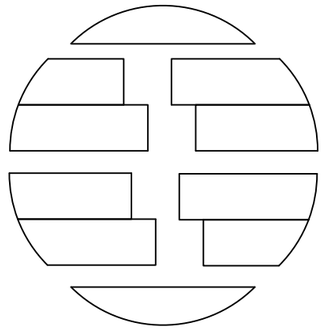

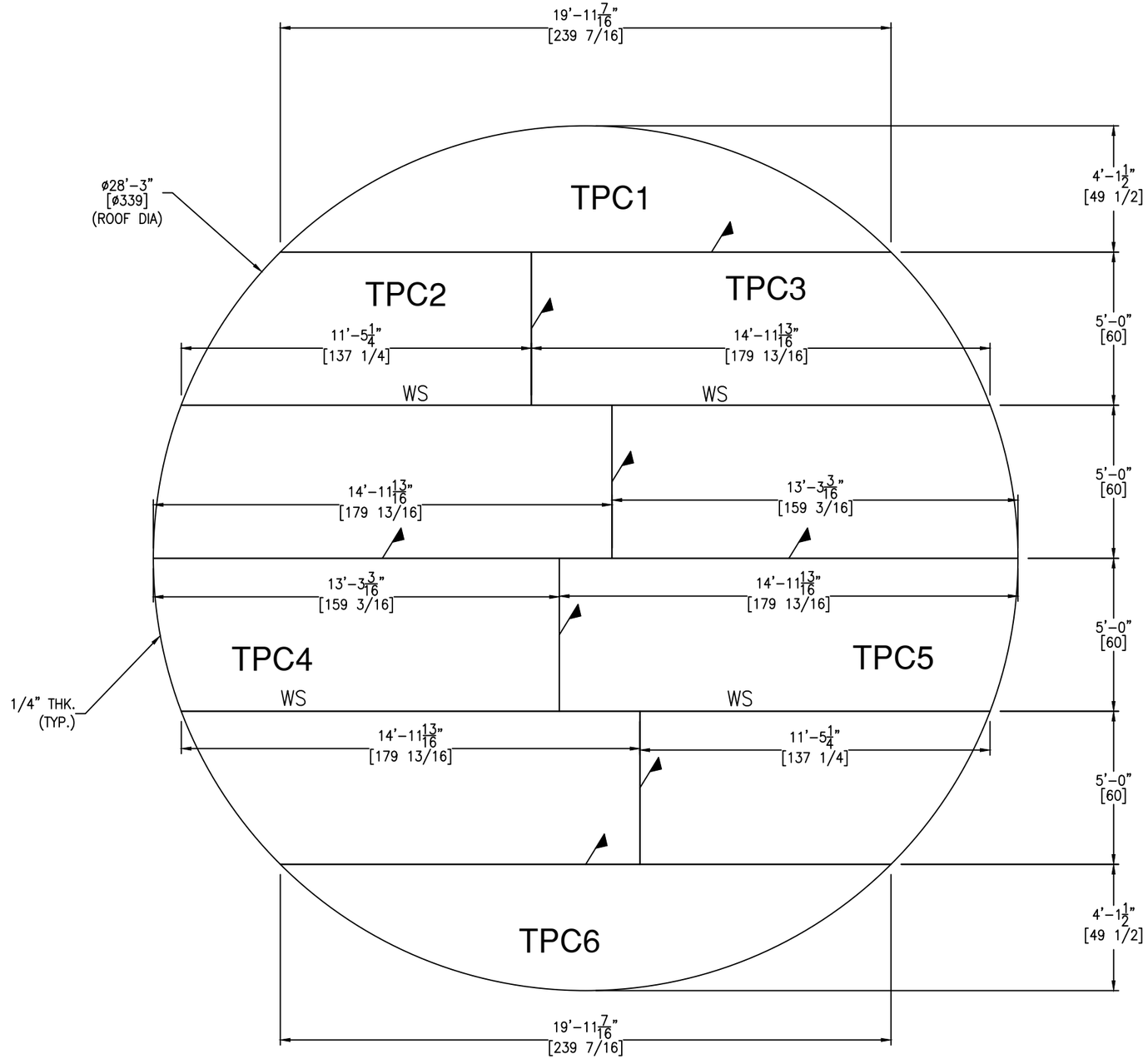

FLAT ROOF DETAIL

REV	D.BY	C.BY	DATE	DESCRIPTION
				AS BUILT
2	RS	NP	5/29/25	CERTIFIED
1	AD	RS	5/23/25	APPROVAL REV 1
0	RS	NP	5/1/25	APPROVAL

1 REVISIONS

Savannah Tank & Equipment Corp.
1517 Telfair Road, Savannah, GA 31415
(912) 233-8902

DRAWN BY: RS
CHK'D BY: NP
APPROVED BY: NP
SCALE: 3/8" = 1'-0"

NOAH INDUSTRIAL
CLEAR CHEST TANK
EQUIP. #
CUST. PO #25004-0001

DRAWING NO.: 044-25-5 SHT 5 OF 9 REV. SET 2

ALL STIFFENERS ARE FIELD WELDED:

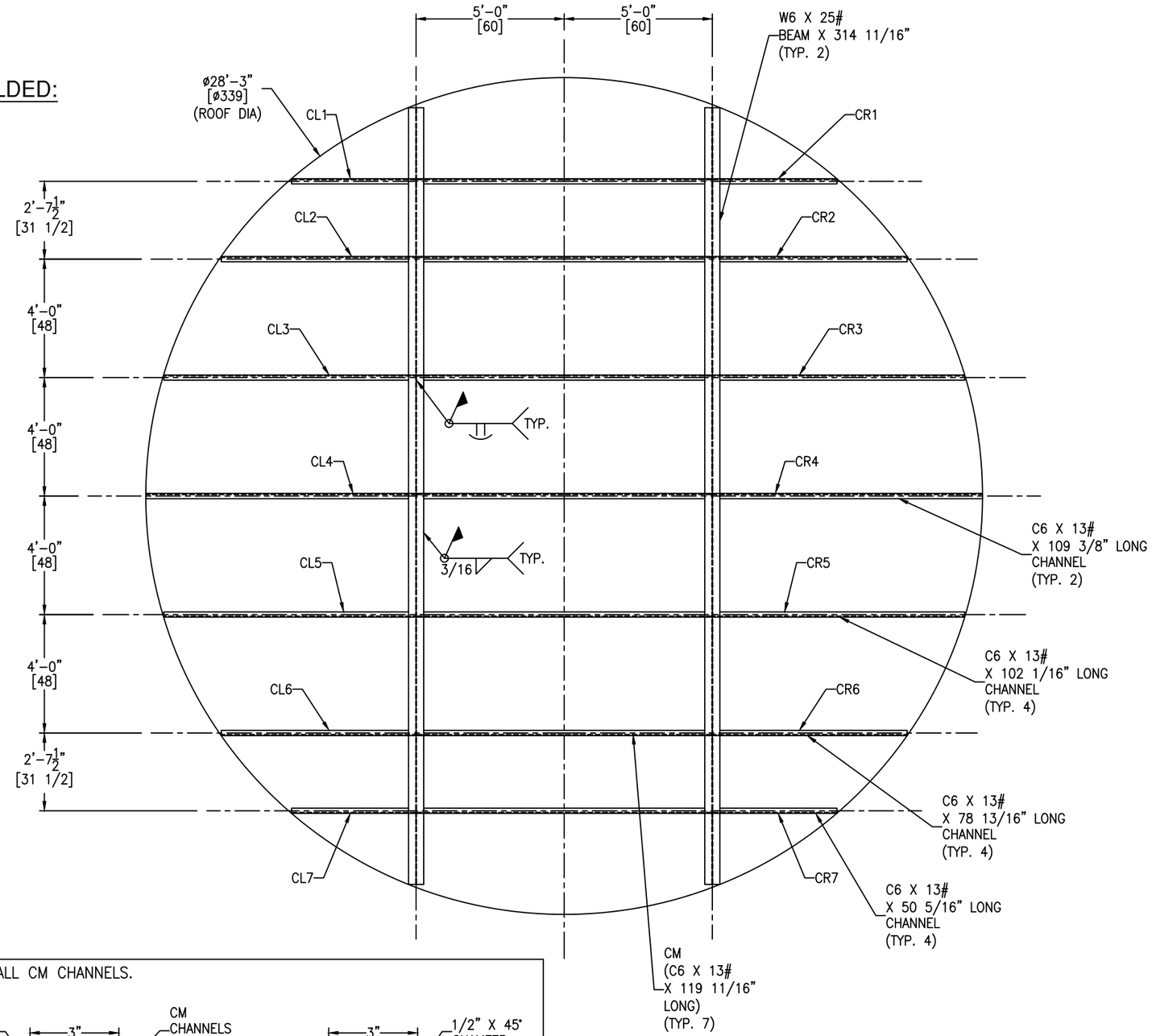

*APPLICABLE TO CR1,CR2,CR3,CR4,CR5,CR6,CR7.

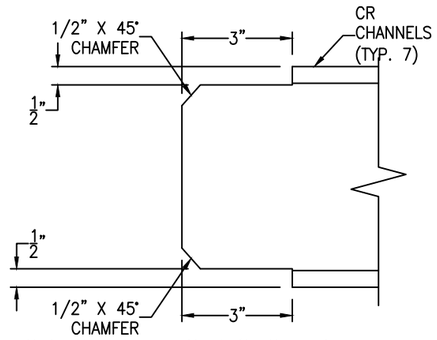

CR CHANNELS NOTCH DETAIL

(7 REQ'D) SCALE: 4 1/2" = 1'-0"

*APPLICABLE TO CL1,CL2,CL3,CL4,CL5,CL6,CL7.

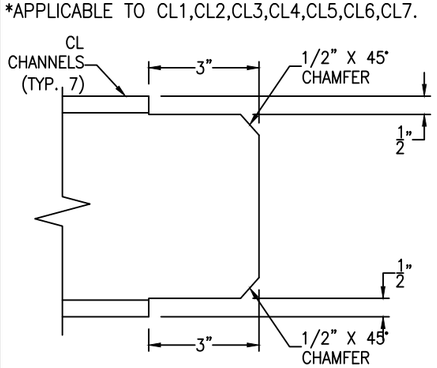

CL CHANNELS NOTCH DETAIL

(7 REQ'D) SCALE: 4 1/2" = 1'-0"

*APPLICABLE TO ALL CM CHANNELS.

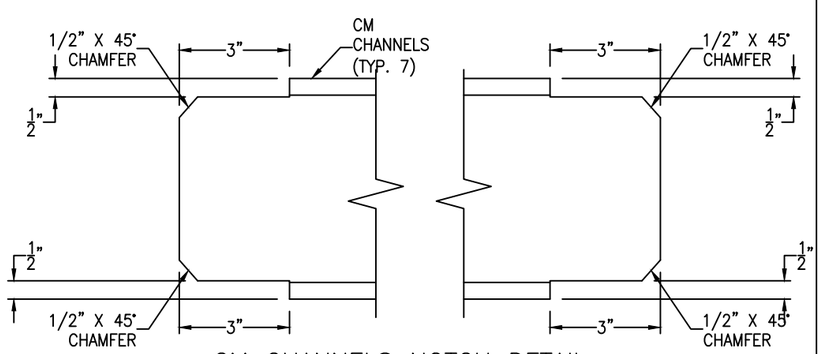

CM CHANNELS NOTCH DETAIL

(7 REQ'D) SCALE: 4 1/2" = 1'-0"

REV	D.BY	C.BY	DATE	DESCRIPTION
				AS BUILT
2	RS	NP	5/29/25	CERTIFIED
1	AD	RS	5/23/25	APPROVAL REV 1
0	RS	NP	5/1/25	APPROVAL

REVISIONS

Savannah Tank & Equipment Corp.
1517 Telfair Road, Savannah, GA 31415
(912) 233-8902

DRAWN BY: RS
CHK'D BY: NP
APPROVED BY: NP
SCALE: 3/8" = 1'-0"

NOAH INDUSTRIAL
CLEAR CHEST TANK
EQUIP. #
CUST. PO #25004-0001

DRAWING NO.: 044-25-6 | SHT 6 OF 9 | REV. SET 2

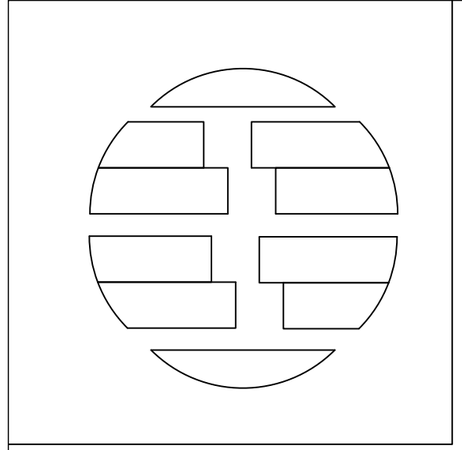

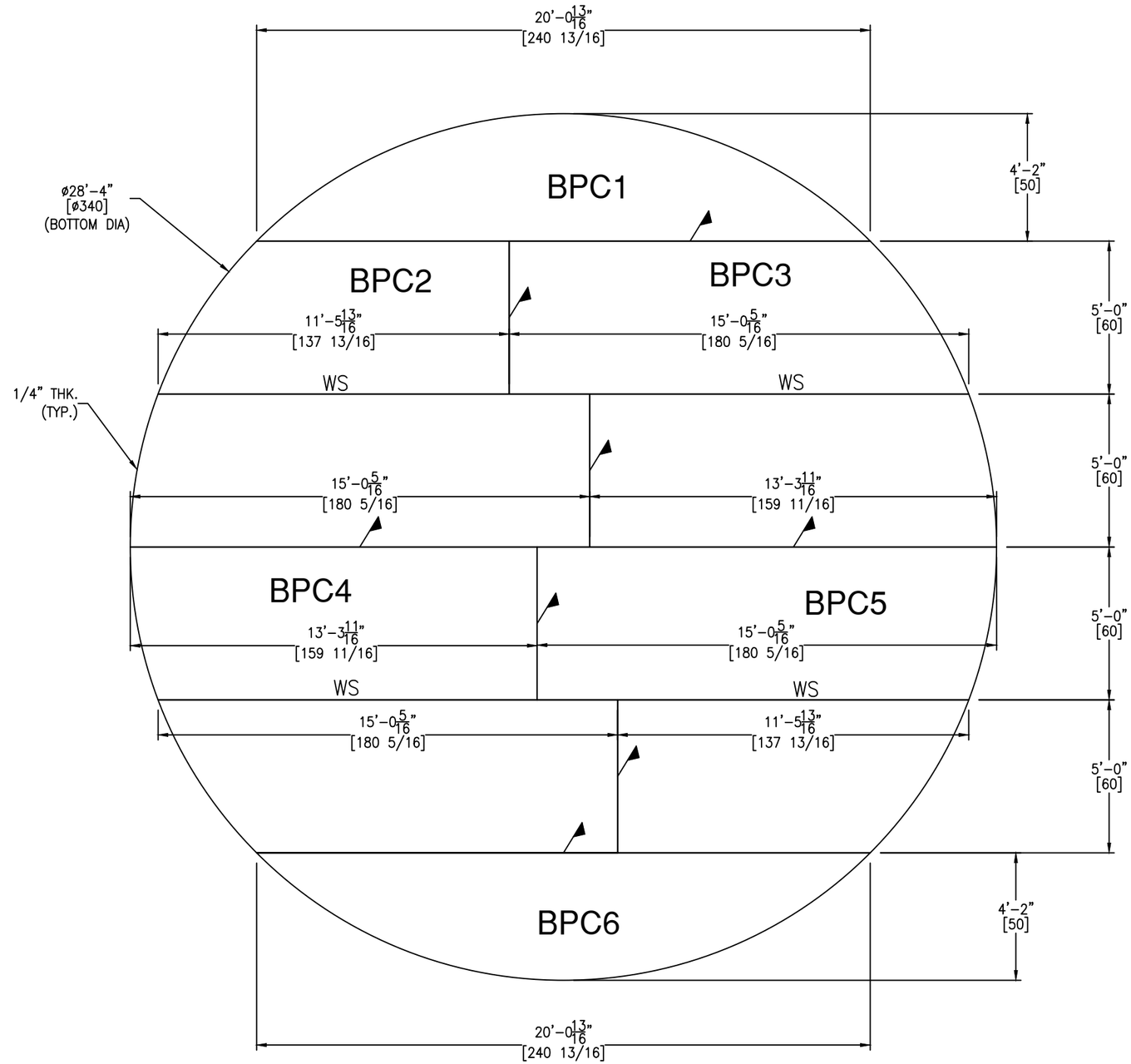

FLAT BOTTOM DETAIL

REV	D.BY	C.BY	DATE	DESCRIPTION
				AS BUILT
2	RS	NP	5/29/25	CERTIFIED
1	AD	RS	5/23/25	APPROVAL REV 1
0	RS	NP	5/1/25	APPROVAL

⚠ REVISIONS

Savannah Tank & Equipment Corp.
1517 Telfair Road, Savannah, GA 31415
(912) 233-8902

DRAWN BY: RS
CHK'D BY: NP
APPROVED BY: NP
SCALE: 3/8" = 1'-0"

NOAH INDUSTRIAL
CLEAR CHEST TANK
EQUIP. #
CUST. PO #25004-0001

DRAWING NO.: 044-25-7 SHT 7 OF 9 REV. SET 2

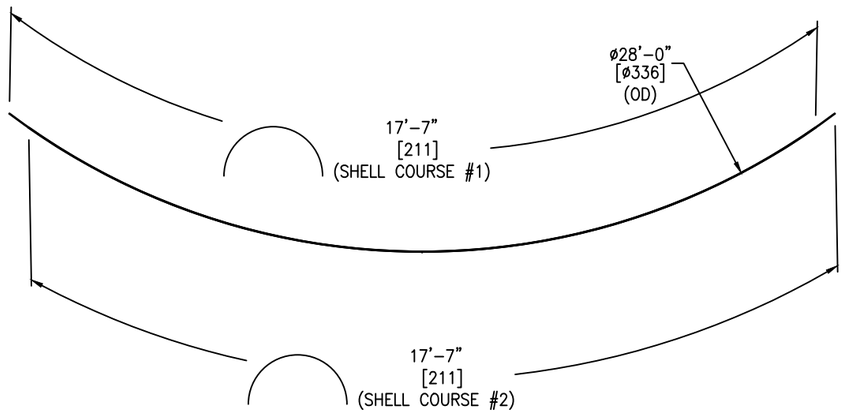

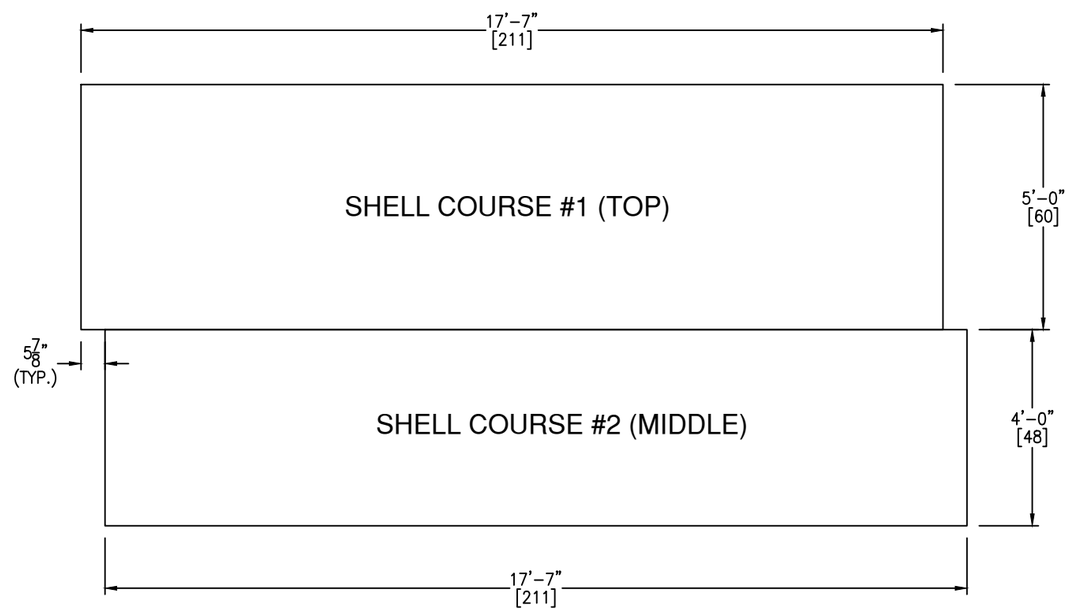

SHELL COURSE #1 & #2 CIRC. SEAMS ARE SHOP WELDED.
ALL OTHER CIRC. SEAMS AND LONG. SEAMS ARE FIELD WELDED.
(QTY. REQ'D: 5)

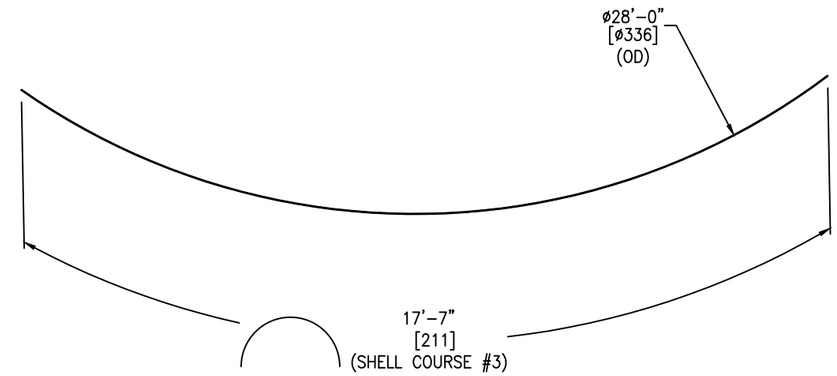

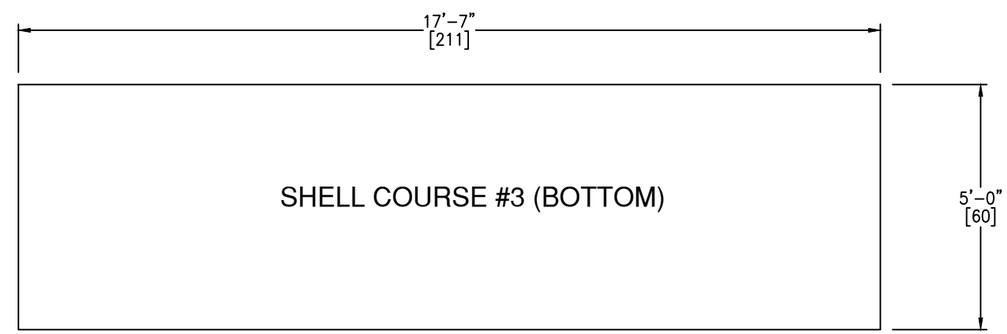

ALL SEAMS ON SHELL COURSE #3 ARE FIELD WELDED.
(QTY. REQ'D: 5)

REV	D.BY	C.BY	DATE	DESCRIPTION
				AS BUILT
2	RS	NP	5/29/25	CERTIFIED
1	AD	RS	5/23/25	APPROVAL REV 1
0	RS	NP	5/1/25	APPROVAL

⚠ REVISIONS

Savannah Tank & Equipment Corp.
1517 Telfair Road, Savannah, GA 31415
(912) 233-8902

DRAWN BY: RS
CHK'D BY: NP
APPROVED BY: NP
SCALE: 1/2" = 1'-0"

NOAH INDUSTRIAL
CLEAR CHEST TANK
EQUIP. #
CUST. PO #25004-0001

DRAWING NO.: 044-25-8 SHT 8 OF 9 REV. SET 2

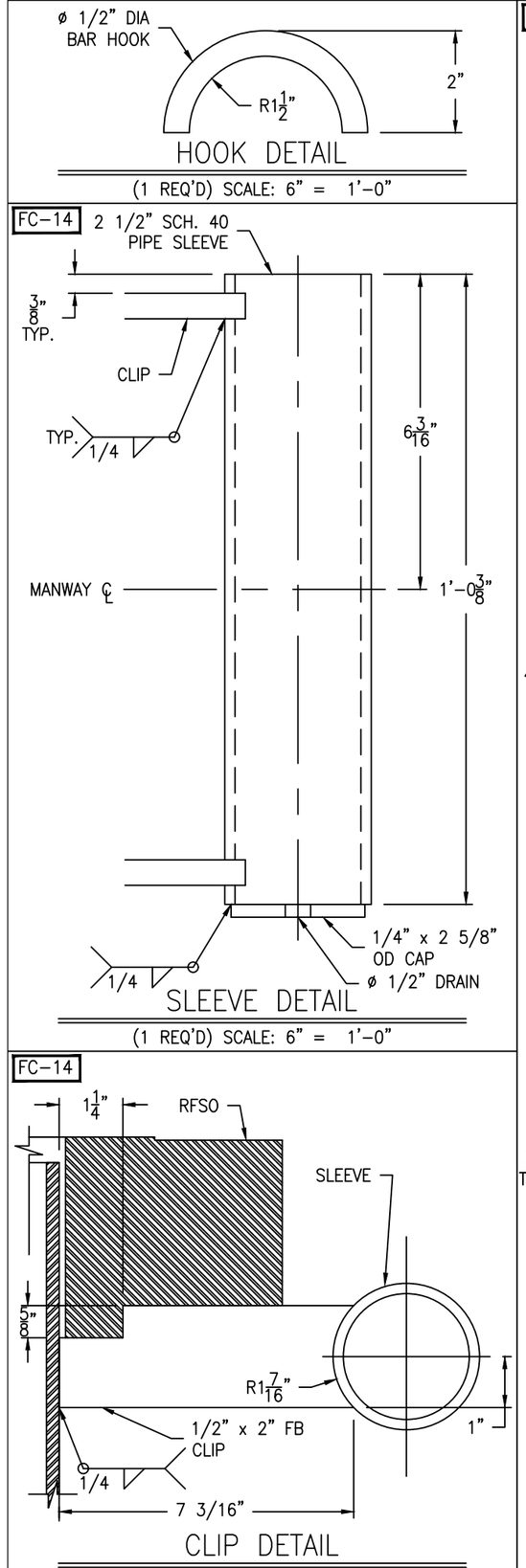

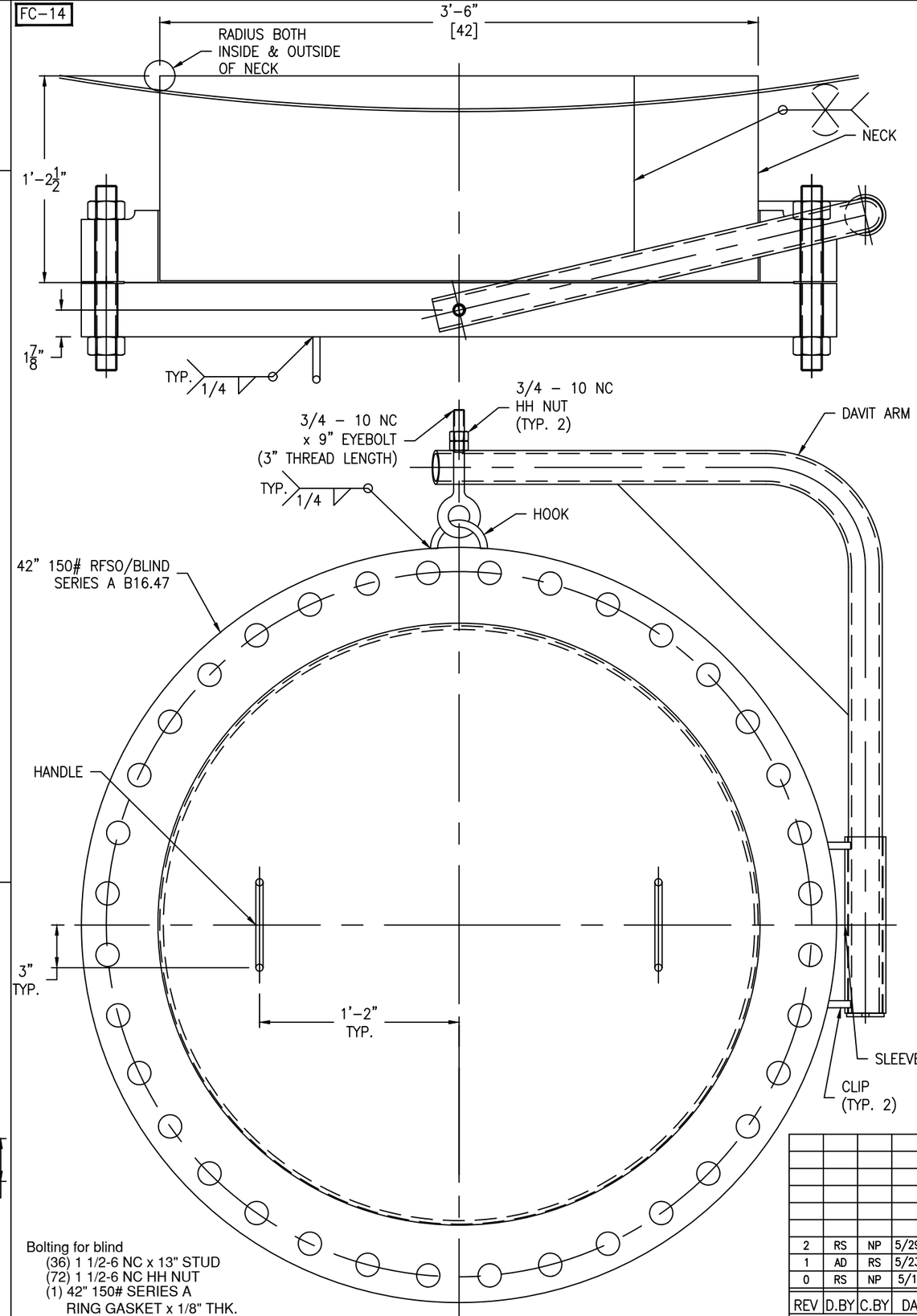

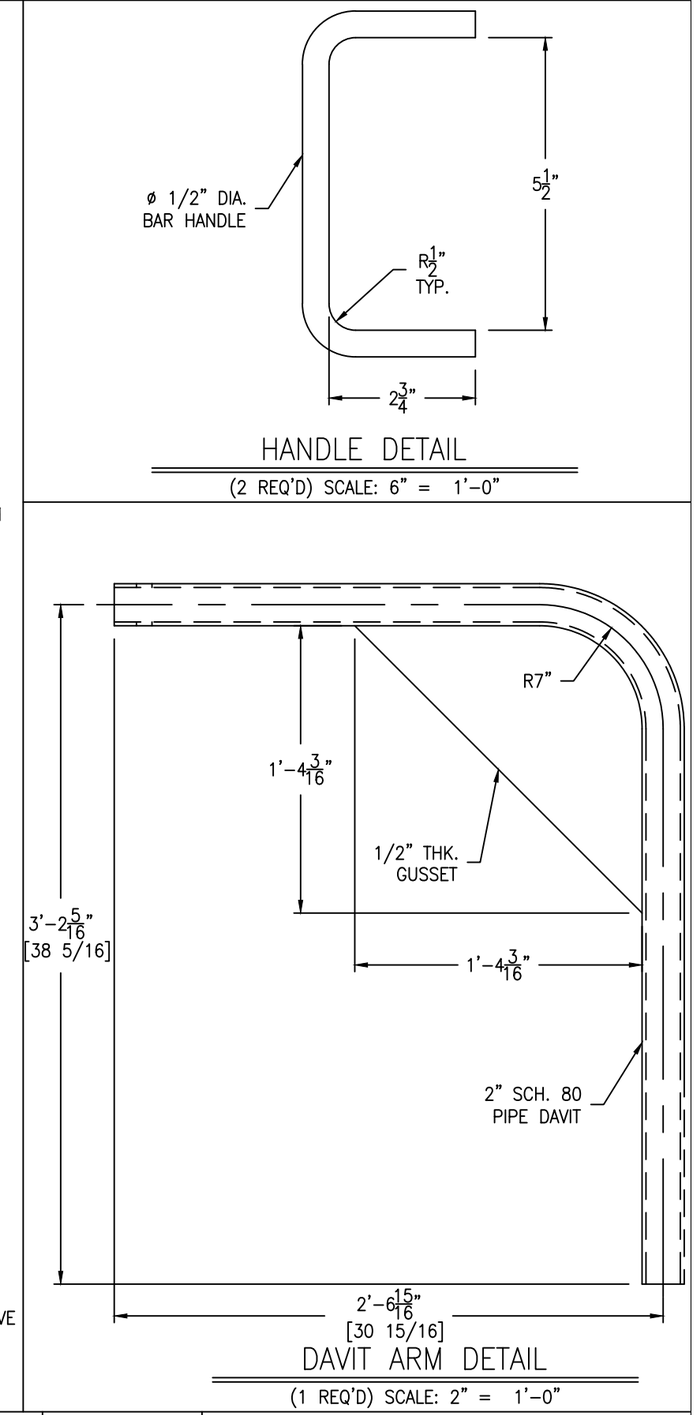

REV	D.BY	C.BY	DATE	DESCRIPTION
				AS BUILT
2	RS	NP	5/29/25	CERTIFIED
1	AD	RS	5/23/25	APPROVAL REV 1
0	RS	NP	5/1/25	APPROVAL

⚠1 REVISIONS

Savannah Tank & Equipment Corp.
1517 Telfair Road, Savannah, GA 31415
(912) 233-8902

DRAWN BY: RS
CHK'D BY: NP
APPROVED BY: NP
SCALE: 2" = 1'-0"

NOAH INDUSTRIAL
CLEAR CHEST TANK
EQUIP. #
CUST. PO #25004-0001

DRAWING NO.: 044-25-9 | SHT 9 OF 9 | REV. SET 2